ELECTRICAL DIAGRAM

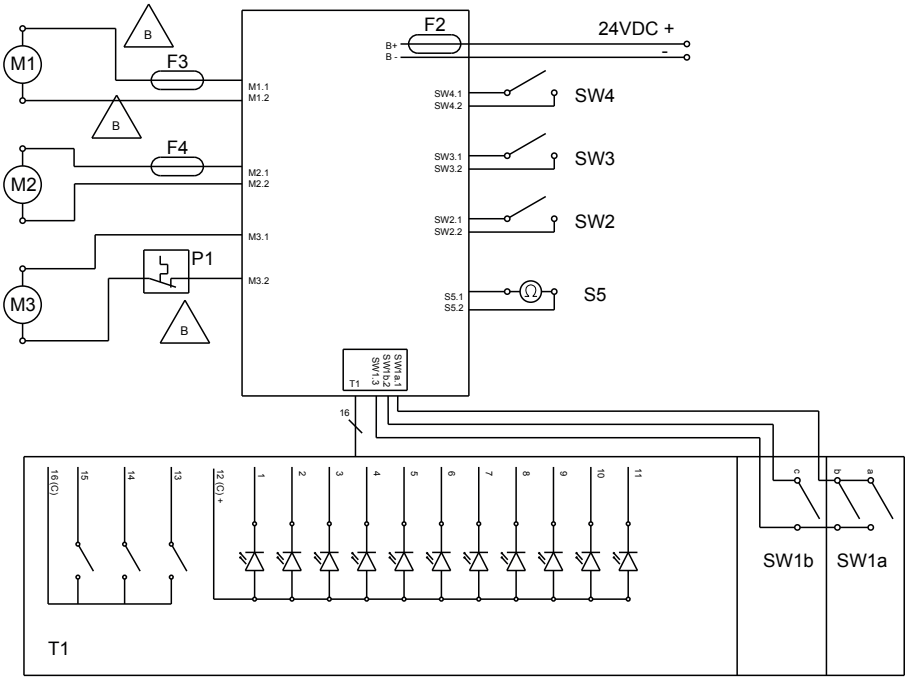

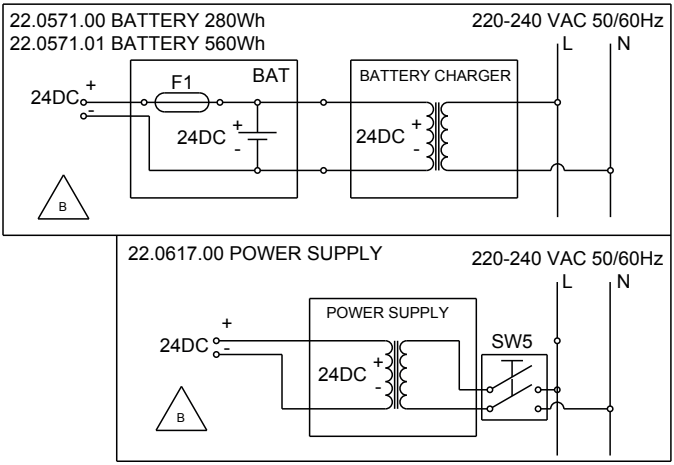

Key:
BAT: .....24 V battery
POWER SUPPLY: .....Power supply
B+/-: .....Power supply
M1: .....Brush motor
M2: .....Suction device motor
M3: .....H2O pump
SW1a.1: .....Brush normal speed consent
SW1b.2: .....Brush reduced speed consent
SW1.3: ..... Common brush consent
SW2: ..... Battery presence
SW3: ..... /
SW4: ..... /
SW5: .....Bi-polar switch
S5: .....Recovery level probe
T1: .....Dashboard
F1: ..... Battery fuse
F2: .....20A circuit board fuse
F3: ..... 15A brush motor fuse
F4: .....12A suction motor fuse
P1:..... 100°C thermal protector

PINOUT T1/SW1 molex minifit 20 poles
1 - LD_1 .....Blue LED for brush
2 - LD_3.....2nd blue LED for H_2O capacity
3 - LD_5.....Blue LED for silent mode
4 - LD_7..... Red LED for dirty water
5 - LD_9.....Yellow LED for battery
6 - LD_11.....Red LED for brush pressure
7 - Puls_1.....Brush button
8 - Puls_3.....Vacuum cleaner/silent button
9 - GND ..... Common keyboard buttons
10 - SW1a.....Brush with normal speed
11 - LD_2..... 3rd blue LED for H_2O capacity
12 - LD_4.....1st blue LED for H_2O capacity
13 - LD_6.....Blue LED for vacuum cleaner
14 - LD_8.....Red LED for battery
15 - LD_10..... Green LED for battery
16 - GDN .. Common keyboard LED cathode
17 - / ..... Empty
18 - Puls_2.....H_2O button
19 - +5V.....Common SW1
20 - SW1b .....Brush with reduced speed